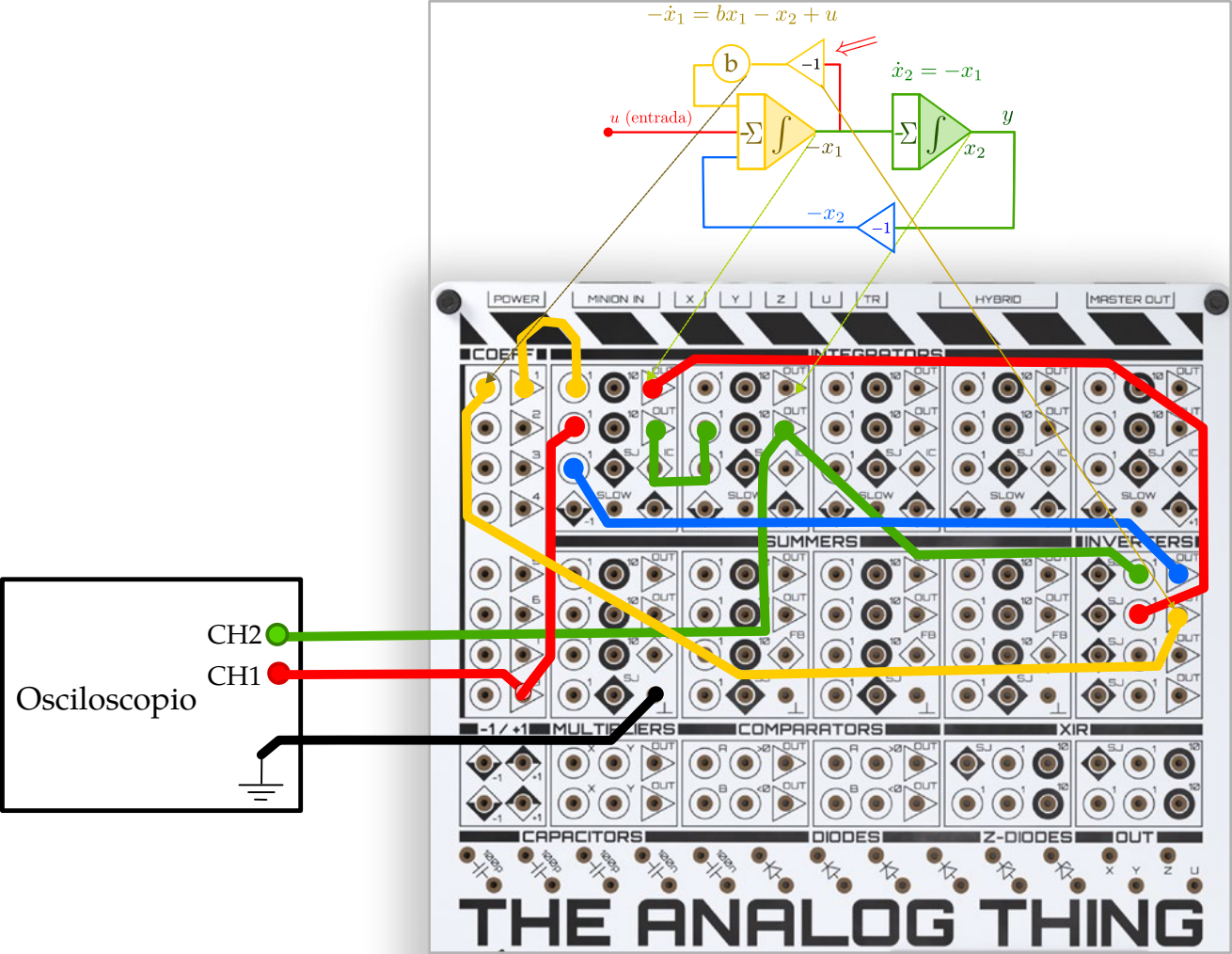
$-\dot{x}_1 = bx_1 - x_2 + u$
b
−1
$\dot{x}_2 = -x_1$
u (entrada)
$-x_1$
x_2
y
$-x_2$
−1
POWER
MINION IN
X
Y
Z
U
TR
HYBRID
MASTER OUT
COEFF
INTEGRATORS
SUMMERS
INVERTERS
MULTIPLIERS
COMPARATORS
XIR
CAPACITORS
DIODES
Z-DIODES
OUT
THE ANALOG THING
CH2
CH1
Osciloscopio